Juniper Switches Provide Scale and Simplicity for any Size Data Center

Switching Architectures Leverage Juniper Data Center Switches to Accelerate Time to Value, Network Management

Challenge

Data center networks are struggling to support new applications, technologies, and traffic patterns. As enterprises decentralize, data centers have also become more geographically dispersed and distributed. Efforts to remedy these challenges with traditional architectures add complexity and compromise business agility.

Solution

Juniper's Ethernet switches, a key component of their data center switching architectures, support deployments that scale from dozens to thousands of ports. The switches also play a critical role in the MetaFabric Architecture, enabling simple, open, and smart data centers.

Benefits

- Scalable—from dozens to thousands of ports
- Time to value—accelerate deployment and delivery of applications within and across multiple sites and the cloud
- Simplified network management—multiple switches can be managed as a single device, streamlining monitoring and maintenance

Today's data centers are being pushed to their limit by new technologies, ever-increasing applications, and ever-changing traffic patterns. To improve business agility, they need to be built around switching architectures that reduce management complexity, accelerate deployment, and improve time to value. Juniper's Ethernet switching portfolio supports a number of innovative switching architectures that support deployments that scale from dozens to thousands of ports, delivering a highly flexible solution for virtually any data center environment.

The Challenge

The pressures on today's enterprise data center are unprecedented. Virtualized and cloud-based applications, big data, SDN, and an increasingly mobile workforce—using many disparate devices—are straining the data center network to the breaking point. In an effort to mitigate congestion, network architects attach more components to existing architectures that were not necessarily designed for scalability and flexibility. These additions may temporarily ease the problem at hand, but they create a more serious problem: network complexity. Complex networks can't adapt as quickly to changes in the business environment, severely compromising their agility.

Juniper Networks Data Center Switches

Juniper Networks® MetaFabric Architecture™ is a holistic blueprint for how to build a data center network that spans different technology areas, multiple data center sites and clouds—both physical and virtual. This solution brief presents an overview of Juniper Networks data center switching architectures—Virtual Chassis, Virtual Chassis Fabric, Junos Fusion for the data center and Juniper Networks QFabric® System, as well as spine-and-leaf Layer 3 fabrics—which are at the heart of the MetaFabric Architecture. Acting as flexible building blocks for networks that scale from dozens to thousands of ports, Juniper data center switches—working with Juniper routing, security, SDN, and open ecosystem solutions—contribute to a comprehensive architecture that accelerates the deployment and delivery of applications within and across multiple sites and clouds.

The primary building blocks of Juniper's data center switching architectures include:

- **EX4300 Ethernet Switch**—a compact, fixed-configuration line of Ethernet switches that deliver a high-performance data center access solution
- **EX9200 Ethernet Switch**—a line of programmable Ethernet switches that simplify the deployment of cloud applications, server virtualization, and rich media collaboration tools in data center core and aggregation environments
- **QFX5100 Switch**—a flexible, high-performance, low-latency, and feature-rich line of Layer 2 and Layer 3 switches optimized for virtualized data center environments
- **QFX5200 Switch**—a line of high-performance fixed-configuration access switches ideally suited for leaf deployments in next-generation IP fabric networks.

- **QFX10000 Switches**—a line of feature-rich fixed-configuration and modular switches optimized for high-scale, automated and virtualized aggregation environments with support for high-density 10GbE, 40GbE, 100GbE and beyond.
- **Junos® Space Network Director**—network management software that lets network administrators visualize, analyze, and control their entire enterprise network—data center and campus, physical and virtual, wired and wireless—through a single pane of glass

Juniper's data center switches are flexible enough to be used in Juniper's Virtual Chassis, Virtual Chassis Fabric, Junos Fusion for the data center, and QFabric System architectures, as well as spine-and-leaf Layer 3 fabric deployments. These technologies simplify any size data center and allow you to scale from dozens to thousands of ports.

Virtual Chassis

Virtual Chassis technology enables up to 10 interconnected switches to be monitored and managed as a single device. Using Virtual Chassis technology, network architects can separate physical topology from logical groupings of endpoints and drive more efficient resource utilization. They can create highly resilient topologies using the GbE or 10GbE uplink ports to extend the Virtual Chassis configuration across long distances spanning multiple wiring closets, floors, or even buildings. The operational simplicity and small form factors of the Virtual Chassis-enabled switches make the technology an excellent architecture for customers who want a flexible solution in small or medium-sized data centers.

Table 1. Virtual Chassis Supported Platforms

Juniper Switch	1/10GbE	10/40GbE
EX4300	✓	
QFX5100		✓

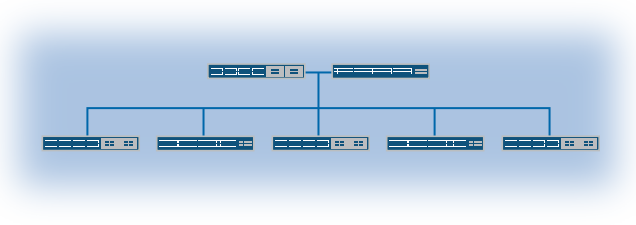

Figure 1: Virtual Chassis configuration

Virtual Chassis Fabric

Virtual Chassis Fabric enables up to 20 interconnected switches to operate as a low-latency, high-performance data center fabric that is managed as a single device. Plug-and-play capability and operational simplicity make Virtual Chassis Fabric an excellent architecture for customers who want a flexible, high-performance, top-of-rack solution in small or medium-sized data centers.

Table 2. Virtual Chassis Fabric Supported Platforms

Juniper Switch	1/10GbE	10/40GbE
EX4300	✓	
QFX5100		✓

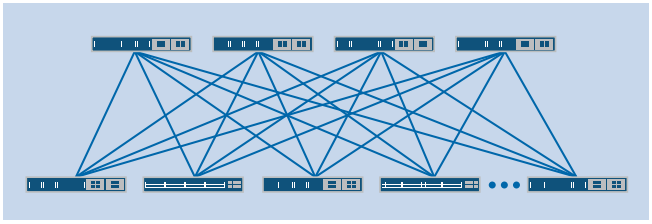

Figure 2: Virtual Chassis Fabric configuration

QFabric System

The QFabric System is composed of multiple components working together as a single switch to provide high performance, any-to-any connectivity, and management simplicity in the data center. QFabric System flattens the entire data center network to a single tier where all access points are equal, eliminating the effects of network locality and making it the ideal network foundation for cloud-ready, virtualized data centers. QFabric performance scales up to 40 Tbps, delivering unprecedented capacity at the access layer. Single-switch management greatly simplifies data center operations with less complexity and lower power, space, cooling, and operational costs. The QFabric System supports these platforms:

Table 3. QFabric System Supported Platforms

Juniper Switch*	1/10GbE
QFX5100 QFabric Node	✓

* QFX3500 and QFX3600 can also be used as QFabric Nodes

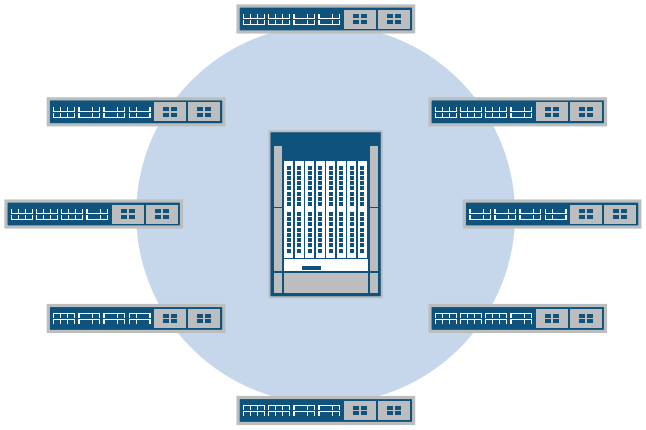

Figure 3: QFabric System deployment

Layer 3 and Open Clos IP Fabrics

A number of data center use cases—such as software-as-a-service (SaaS) and software-defined networking (SDN)—are best served with an IP Fabric architecture. IP Fabrics are commonly deployed in a spine-and-leaf arrangement, where spine nodes interconnect with leaf nodes in an any-to-any

topology that can scale from hundreds to more than 10,000 servers to support high traffic and application workflows.

A major design tenet of IP Fabrics and spine-and-leaf designs is that traffic can be forwarded on optimal paths between switch nodes at Layer 3; alternate paths may be utilized if an outage occurs, ensuring high performance and highly resilient operations. Cross-sectional interconnect bandwidth can be improved though link aggregation groups (LAGs) of 10GbE and by multi-pathing between leafs and spines.

Open Clos architectures, a variation of spine-and-leaf IP Fabrics, use a set of libraries that automate the creation of IP Fabrics in the data center; working with Junos Space Network Director, an Open Clos network can be provisioned holistically using Zero-Touch Provisioning (ZTP), providing automatic link detection, network configuration, and provisioning through a single management interface, reducing operational complexity.

Table 4. Layer 3 and Open Clos IP Fabric Supported Platforms

Juniper Switch	1/10GbE	10/40GbE	10/40/ 100GbE
EX4300	✓		
QFX5100		✓	
QFX5200		✓	✓
QFX10002		✓	✓
QFX10008		✓	✓
QFX10016		✓	✓

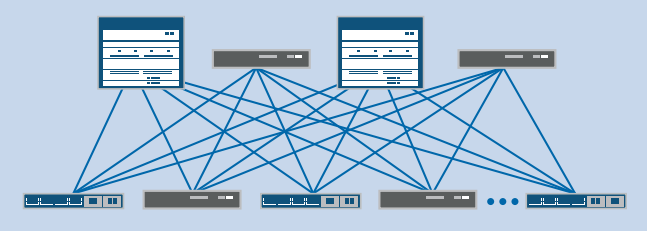

Figure 4: Layer 3 and Open Clos IP Fabric configuration

Junos Fusion

Juniper Networks designed Junos Fusion to address the challenges posed by traditional network architectures. An innovative architecture based on three main design principles—simplicity at scale; smart; and flexible—Junos Fusion provides customers with a bridge from their existing legacy networks to software-defined clouds.

A highly scalable fabric, Junos Fusion collapses multi-tier architectures into a single tier, reducing the number of devices in the data center network and cutting CapEx. The Junos Fusion architecture includes two main components—"aggregation" devices and "satellite" devices—that work together as a single switching system, flattening the network without compromising resiliency. These scalable Junos Fusion deployments consist of a pair of aggregation devices and up to 128 satellite devices, creating a centrally managed fabric that greatly simplifies operations at scale, reduces OpEx, and accelerates the deployment of new applications and services.

Featuring plug-and-play provisioning and auto-configuration capabilities, Junos Fusion delivers industry-leading scale, performance and density, making it ideally suited to the needs of highly virtualized, business-critical IT data centers and SDN-enabled cloud data centers.

Table 5. Junos Fusion for the Data Center Supported Platforms

Juniper Switch	1/10GbE	10/40GbE	10/40/ 100GbE
EX4300	✓		
QFX5100		✓	
QFX5200		✓	✓
QFX10002		✓	✓
QFX10008		✓	✓
QFX10016		✓	✓

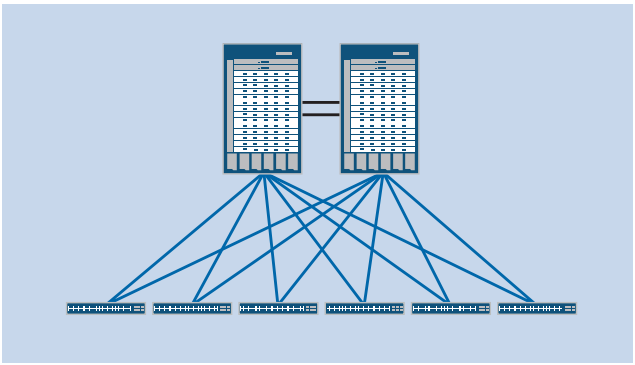

Figure 5: Junos Fusion configuration

Junos EVPN

The Ethernet Virtual Private Network (EVPN) protocol delivers an end-to-end solution that encompasses data center as well as WAN networks, providing seamless connectivity from an application server to a database server located in the same or different data centers.

EVPN supports a wide variety of deployment options:

1. EVPN leverages an MPLS-based forwarding plane in MPLS networks, making it ideally suited for WAN deployments as well as deployments in MPLS-enabled data centers.
2. EVPN leverages a VXLAN-based forwarding plane, making it ideally suited for data centers with IP fabrics as well as WAN deployments where customers need to enable a VPN service over a plain IP infrastructure.
3. Implementing EVPN with VXLAN in data centers with VTEP tunnels starting/ending in virtual routers also allows L2 stretch functionality to VMs directly from the server infrastructure.

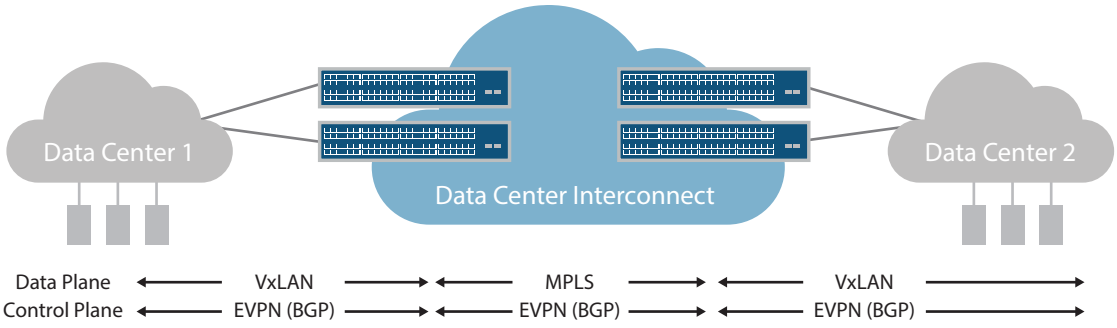

Figure 6: Junos EVPN configuration

Table 6. Junos EVPN Supported Platforms

Juniper Switch	EVPN + VXLAN Support	EVPN + MPLS Support
QFX5100	✓	✓*
QFX10002	✓*	✓*
QFX10008	✓*	✓*
QFX10016	✓*	✓*

*Roadmap

Summary—A Portfolio of Juniper Data Center Switches for MetaFabric Deployments

If you are designing a data center architecture and want to reduce complexity, increase business agility, and improve time to value, Juniper data center switches belong in your toolkit. Operating as the heart of the Juniper Networks MetaFabric Architecture, these powerful solutions can meet even the toughest requirements for performance, scalability, and ease of management. More than that, Juniper data center switches simplify your network to accelerate time to market and provide the agility your organization needs to compete—and win—in today's challenging marketplace.

Corporate and Sales Headquarters
Juniper Networks, Inc.
1133 Innovation Way
Sunnyvale, CA 94089 USA
Phone: 888.JUNIPER (888.586.4737)
or +1.408.745.2000
Fax: +1.408.745.2100
www.juniper.net

APAC and EMEA Headquarters
Juniper Networks International B.V.
Boeing Avenue 240
1119 PZ Schiphol-Rijk
Amsterdam, The Netherlands
Phone: +31.0.207.125.700
Fax: +31.0.207.125.701

Copyright 2015 Juniper Networks, Inc. All rights reserved. Juniper Networks, the Juniper Networks logo, Junos and QFabric are registered trademarks of Juniper Networks, Inc. in the United States and other countries. All other trademarks, service marks, registered marks, or registered service marks are the property of their respective owners. Juniper Networks assumes no responsibility for any inaccuracies in this document. Juniper Networks reserves the right to change, modify, transfer, or otherwise revise this publication without notice.

3510502-004-EN Oct 2015